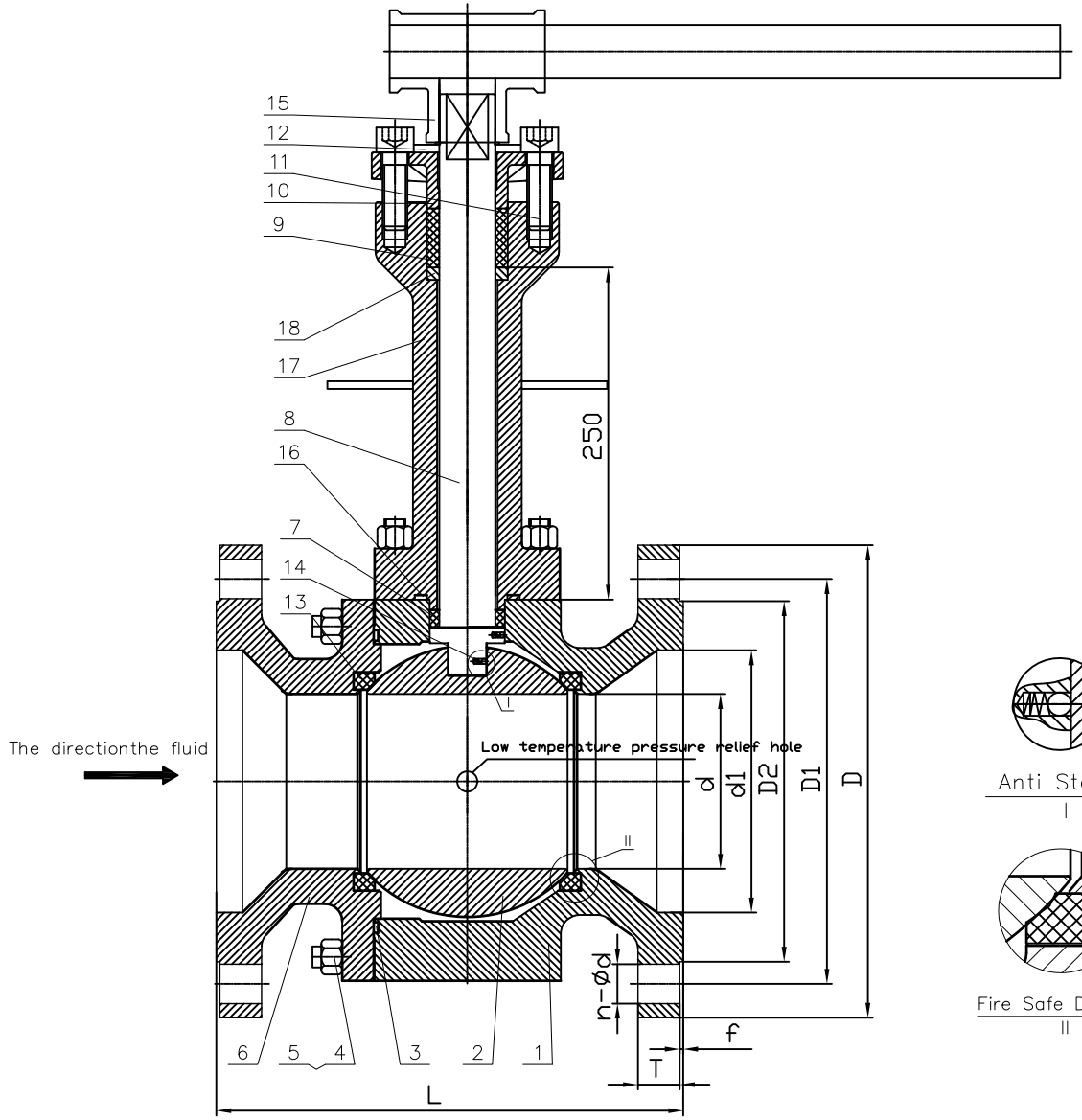

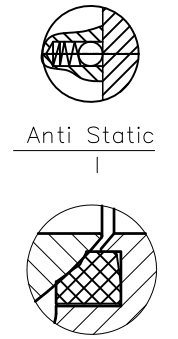

Technical Requirements

1.Design std. of the valve: API 6D
2.Inspection and testing: API 598
3.Flange dimensions: ASME B16.5
4.Face to face dimensions: ASME B16.10
5.Pressure-temperature base: ASME B16.34

18	Packing Gasket	A182 F316
17	Packing box	A182 F316
16	Gasket	SS316+PTFE
15	handle	A216 WCB
14	anti static spring	SS316
13	Seat	PCTFE
12	The limiting block	SS304
11	Screw	A193 B8M
10	Packing Gland	A351 CF8
9	Packing	Graphite
8	Stem	XM-19
7	Gasket	PCTFE
6	Bonnet	A182 F316
5	Nut	A194 8M
4	Bolt	A193 B8M
3	Gasket	SS316+PTFE
2	Ball	A182 F316
1	Body	A182 F316

Performance	
Norminal Pressure	Class150
Shell Test Pressure	3.0MPa
Seal Test Pressure	2.2MPa
Air tight Test Pressure	0.6MPa
Suitable Temp.	-196~66C°
Suitable medium	W.O.G etc

DESIGN BY		DRAWING NO		DAGAO TECHNOLOGY CO.,LTD
CHECKED BY				ASSEMBLY
STANDARD BY		REV		
APPROVED BY		Date		
THE USER CONFIRM				CRYOGENIC BALL VALVE

NPS	d1	d	L	D	D1	D2	T	f	n-Ød